Detail TreeParker system 1,2 m scale 1:30

Aeration- / Irrigation system

Irrigation system, ø 80 mm
incl. T-piece ø 80mm

Aeration system, ø 80 mm
inclusief T-piece ø 80

Paving elements for heavy traffic

Paving 100 mm

Aggregate fine 50 mm

Aggregate base course 250 - 300 mm

Tree grate

Remainder

Airlayer between 30 up 80 mm

Root Ball Anchoring for roof gardens GGB 120650

Steel mesh ø 8 mm gapsize 150 x 150 mm

Plantingsoil

sub base aggregate 100 mm

TreeParker system

TRG Root guidance panel DR 60

TreeParker Geotextile

TreeParker combigrid 167

TreeParker unit 120

TreeParker Frame + Decks

TreeParker Posts 1200 mm,

TreeParker Frames

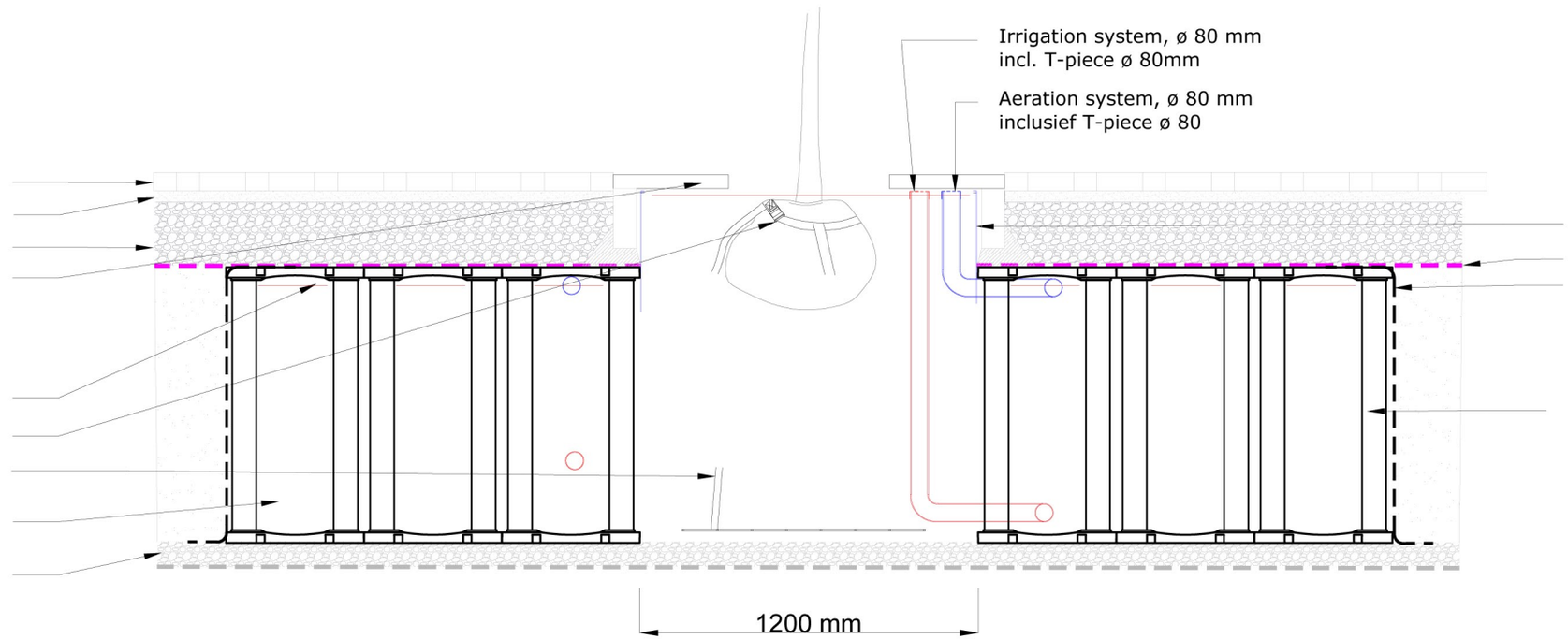

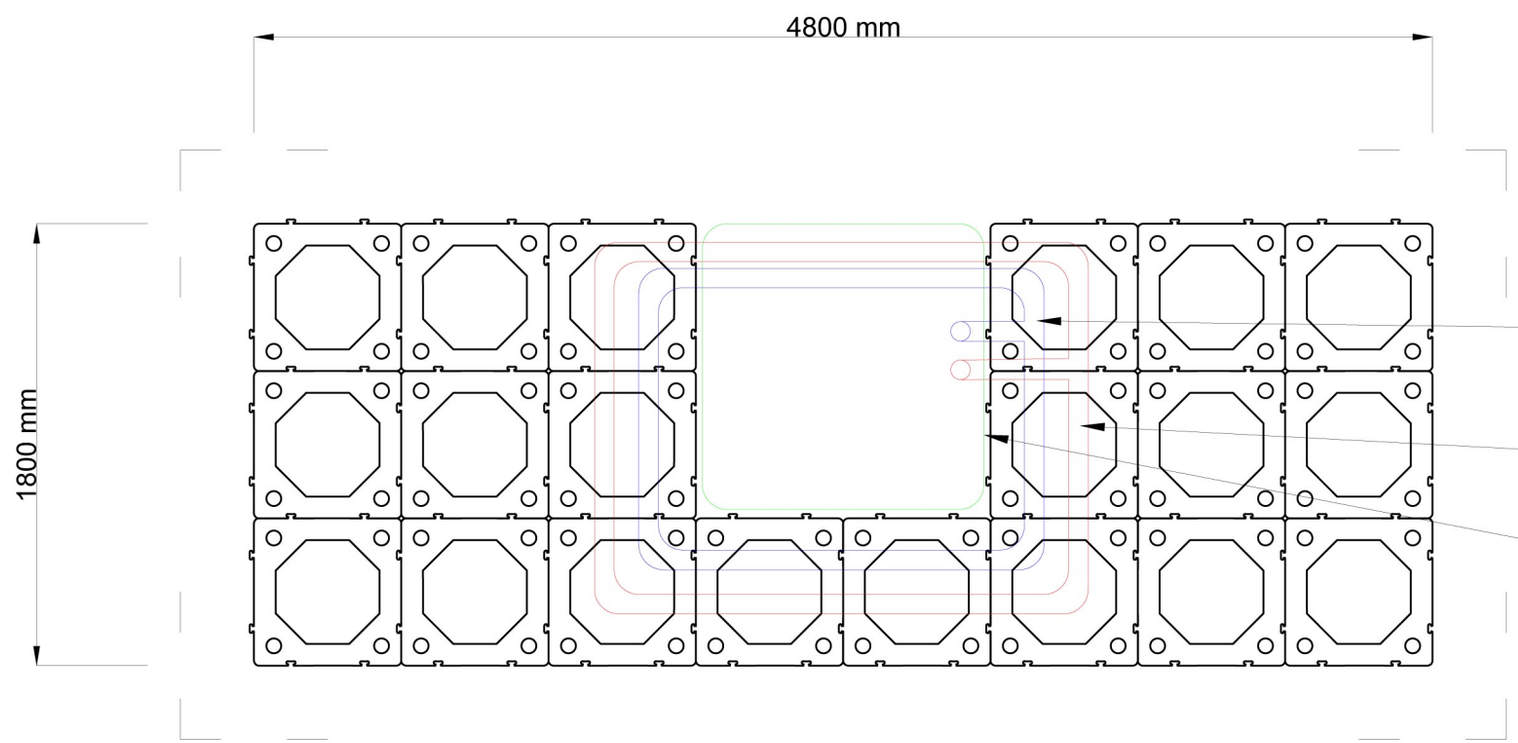

Irrigation system, ø 80 mm
incl. T-piece ø 80mm

Aeration system, ø 80 mm
inclusief T-piece ø 80

TRG Root guidance panel DR 60